THE POWER TO CREATE BETTER LIGHT ™

Type A+B Hybrid Linear T8

LB48T8U6/8T/13P-AB

Commercial Grade LED T8 Lamp



Descriptions:

The ProLED Select T8 Linear Hybrid (Type A+B) lamps offer the most versatile installation solution for your linear fluorescent T8 or T12 retrofit needs. Fully certified as a UL 1598C retrofit kit in single end or double end ballast bypass scenarios (UL Type B) and UL listed for use with electronic T8 fluorescent ballasts (UL Type A), these lamps provide the perfect, hassle-free solution for whatever the project requires. When being used with an instant start, programmed start, or emergency backup ballast, no fixture re- wiring is needed. If the ballast fails in the future, simply re-wire the fixture with 120-277V line voltage using either single end or double end wiring.This CCT selectable hybrid comes in 2-foot, 3-foot, and 4-foot lengths, and offers users the ability to select between 3500K, 4000K, and 5000K kelvin temperatures by simply sliding the selector on the tube to the desired color.

Features & Benefits:

- Type A mode: Works on existing compatible Instant Start, Programmed Start, Dimming electronic ballast
- Type B mode: Internal Driver (Direct 120-277VAC input)
- Utilizes existing instant start or rapid start G13 sockets
- High performance plastic series
- ArmorCoat Shatterproof Coating
- Long life
- High CRI
- Instant on, no delay or warm up time
- Convenient and quick installation
- Works in cold temperature applications
- Compatible with controls and sensors
- Glass tube for superior optical performance
- Continuous Dimming to 10%
- 5 Year Warranty
- For 8', lamp consists of (2) 4ft sections

Specifications:

Ordering Code	Length (in)	Wattage Direct AC	Wattage With Ballast	Input Voltage	CCT (K)	Initial Lumens	CRI	Beam Angle	System Efficacy Direct AC	System Efficacy with Ballast
LB48T8U6/8T/13P-AB	24	13	15.5	120-277V	3500K/4000K/5000K	1950	83	325	150	125

Wiring Diagram:

Copyright © 2008-2024. All Rights Reserved
12257 Florence Ave. | Santa Fe Springs. CA 90670
Toll Free: (866) 933-7736 | Tel.: (562) 529-2938 | Fax: (562) 529-2978
Email: info@espentech.com | www.espentech.com

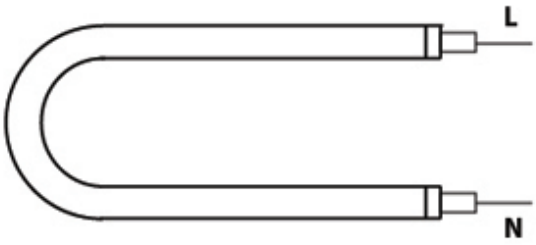

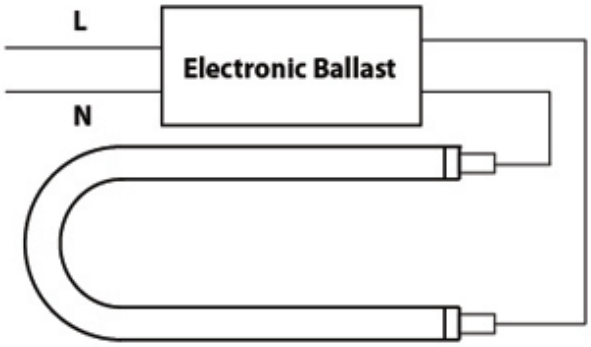

DLC Listing:

Ordering Code	DLC Product ID	DLC Product Model	DLC Version
LB48T8U6/8T/13P-AB	S-NB6DC2	LB48T8U6/8T/13P-AB	5.1

Specification data is based on tests performed in a controlled environment and represents relative performance. Actual performance can vary depending on operating conditions. Application and performance data subject to change without notice. All specifications are nominal unless noted otherwise.

Copyright © 2008-2024. All Rights Reserved
12257 Florence Ave. | Santa Fe Springs. CA 90670
Toll Free: (866) 933-7736 | Tel.: (562) 529-2938 | Fax: (562) 529-2978
Email: info@espentech.com | www.espentech.com